

Explosion-Proof Terminal Box

Installation Guide

Quick Start Guide

©2022 Hangzhou Hikvision Digital Technology Co., Ltd. All rights reserved.

About this Manual

The Manual includes instructions for using and managing the Product. Pictures, charts, images and all other information hereinafter are for description and explanation only. The information contained in the Manual is subject to change, without notice, due to firmware updates or other reasons. Please find the latest version of this Manual at the Hikvision website (https://www.hikvision.com/).

Please use this Manual with the guidance and assistance of professionals trained in supporting the Product.

Trademarks

HIKVISION and other Hikvision's trademarks and logos are the properties of Hikvision in various jurisdictions.

Other trademarks and logos mentioned are the properties of their respective owners.

Disclaimer

TO THE MAXIMUM EXTENT PERMITTED BY APPLICABLE LAW, THIS MANUAL AND THE PRODUCT DESCRIBED, WITH ITS HARDWARE, SOFTWARE AND FIRMWARE, ARE PROVIDED "AS IS" AND "WITH ALL FAULTS AND ERRORS". HIKVISION MAKES NO WARRANTIES, EXPRESS OR IMPLIED, INCLUDING WITHOUT LIMITATION, MERCHANTABILITY, SATISFACTORY QUALITY, OR FITNESS FOR A PARTICULAR PURPOSE. THE USE OF THE PRODUCT BY YOU IS AT

YOUR OWN RISK. IN NO EVENT WILL HIKVISION BE LIABLE TO YOU FOR ANY SPECIAL, CONSEQUENTIAL, INCIDENTAL, OR INDIRECT DAMAGES, INCLUDING, AMONG OTHERS, DAMAGES FOR LOSS OF BUSINESS PROFITS, BUSINESS INTERRUPTION, OR LOSS OF DATA, CORRUPTION OF SYSTEMS, OR LOSS OF DOCUMENTATION, WHETHER BASED ON BREACH OF CONTRACT, TORT (INCLUDING NEGLIGENCE), PRODUCT LIABILITY, OR OTHERWISE, IN CONNECTION WITH THE USE OF THE PRODUCT, EVEN IF HIKVISION HAS BEEN ADVISED OF THE POSSIBILITY OF SUCH DAMAGES OR LOSS.

YOU ACKNOWLEDGE THAT THE NATURE OF THE INTERNET PROVIDES FOR INHERENT SECURITY RISKS, AND HIKVISION SHALL NOT TAKE ANY RESPONSIBILITIES FOR ABNORMAL OPERATION, PRIVACY LEAKAGE OR OTHER DAMAGES RESULTING FROM CYBER-ATTACK, HACKER ATTACK, VIRUS INFECTION, OR OTHER INTERNET SECURITY RISKS; HOWEVER, HIKVISION WILL PROVIDE TIMELY TECHNICAL SUPPORT IF REQUIRED.

YOU AGREE TO USE THIS PRODUCT IN COMPLIANCE WITH ALL APPLICABLE LAWS, AND YOU ARE SOLELY RESPONSIBLE FOR ENSURING THAT YOUR USE CONFORMS TO THE APPLICABLE LAW. ESPECIALLY, YOU ARE RESPONSIBLE, FOR USING THIS PRODUCT IN A MANNER THAT DOES NOT INFRINGE ON THE RIGHTS OF THIRD PARTIES, INCLUDING WITHOUT LIMITATION, RIGHTS OF PUBLICITY, INTELLECTUAL PROPERTY RIGHTS, OR DATA PROTECTION AND OTHER PRIVACY RIGHTS. YOU SHALL NOT USE THIS PRODUCT FOR ANY PROHIBITED END-USES, INCLUDING THE DEVELOPMENT OR PRODUCTION OF WEAPONS OF MASS DESTRUCTION, THE DEVELOPMENT OR PRODUCTION OF CHEMICAL OR BIOLOGICAL WEAPONS, ANY ACTIVITIES IN THE CONTEXT RELATED TO ANY

NUCLEAR EXPLOSIVE OR UNSAFE NUCLEAR FUEL-CYCLE, OR IN SUPPORT OF HUMAN RIGHTS ABUSES.

IN THE EVENT OF ANY CONFLICTS BETWEEN THIS MANUAL AND THE APPLICABLE LAW, THE LATTER PREVAILS.

Regulatory Information

Intended Use of the Terminal Box and the Supplied Cable Gland with Elastomeric Sealing Rings

ATEX: II 2 G D Ex db IIC T6 Gb/Ex tb IIIC T80℃ Db IP68

IECEx: Ex db IIC T6 Gb/Ex tb IIIC T80℃ Db IP68

Hazardous Area Classification: Zone 1, Zone 2, Zone 21, Zone 22.

IP Degree: IP68 (2m, 2h)

Ex Standards:

IEC 60079-0: 2017	EN IEC 60079-0: 2018
IEC 60079-1: 2014	EN 60079-1: 2014
IEC 60079-31: 2013	EN 60079-31: 2014

Specific Conditions of Use

1. The flameproof joints are not intended to be repaired, Contact the Original manufacture for information on the dimensions of the flameproof joints.

2. Under explosive dust circumstances, the enclosure of this equipment may generate an ignition-capable level of electrostatic charge. Therefore the equipment shall not be installed in a location where the external conditions are conducive to the build-up of electrostatic charge on such surfaces. In addition, the equipment shall only be cleaned with a damp cloth.

3. USE FASTENERS WITH YIELD STRESS ⩾ 450MPa

Nameplate

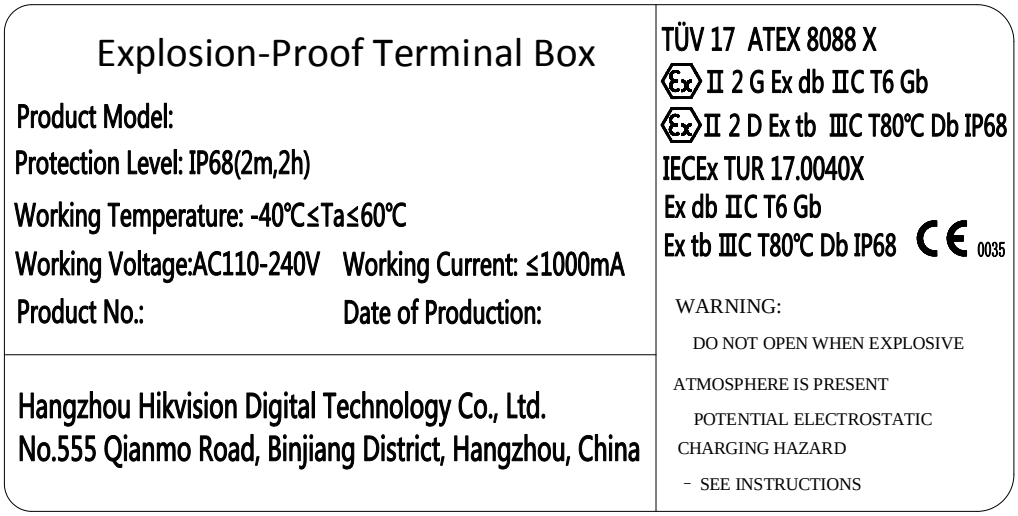

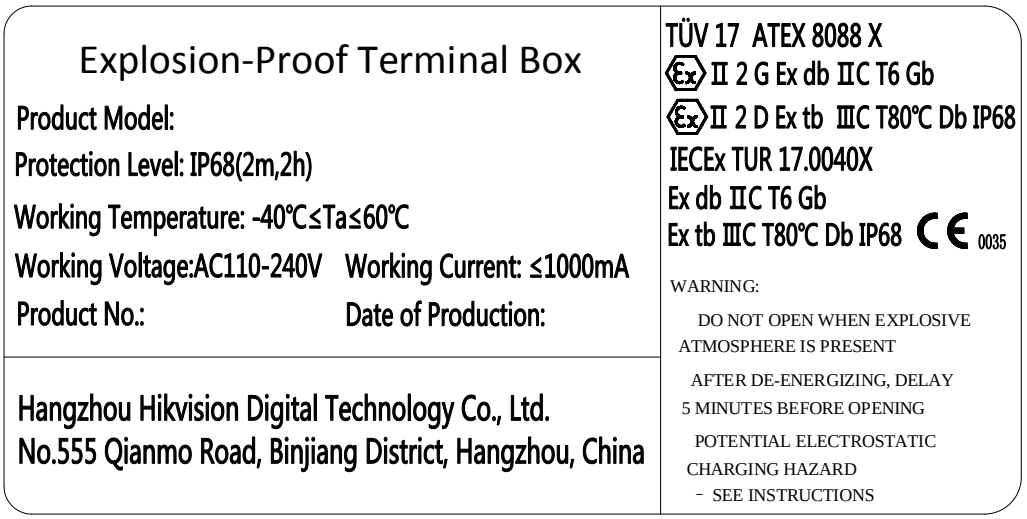

The terminal box can be used in hazardous areas Zone 1, Zone 2, Zone 21, and Zone 22 where ignitable concentrations of

a) flammable gases, vapors or liquids (with T1 to T6 classification) or

b) combustible dust or ignitable fibers/flyings ARE LIKELY TO EXIST.

Note

For model difference, see *Section 1.2*.

WARNINGS:

1. Ambient Temperature: -40°C to +60°C for the terminal box and the cable gland with elastomeric sealing rings.
2. When assembly, operation and maintenance, the operator must follow the requirements of the IEC 60079-14: latest version Explosive atmosphere- Part 14: Electrical installation design, selection and erection, beside of the manufacturer's operation instruction or its National equivalent.
3. Repair and overhaul shall comply with IEC 60079-19: latest version or its National equivalent.

Safety Instruction

The symbols that may be found in this document are defined as follows.

Symbol	Description
Note	Provides additional information to emphasize or supplement important points of the main text.
Caution	Indicates a potentially hazardous situation, which if not avoided, could result in equipment damage, data loss, performance degradation, or unexpected results.
Danger	Indicates a hazard with a high level of risk, which if not avoided, will result in death or serious injury.

Danger

- Grounding:

  The both internal and external earthing shall be connected reliably.

  Ground wire cross-sectional area of not less than the phase connector cross-sectional area level, at least 4 mm^2.

- All the electrical operation should be strictly compliance with the electrical safety regulations, fire prevention regulations and other related regulations of the nation and region.
- To avoid fire danger caused by electrostatic charge, never touch or wipe the device in explosive environment. Perform the wiping and replacing accessories only under non-explosive environment with the anti-electrostatic gloves.
- When the device is installed on wall or ceiling, it shall be firmly fixed.

Caution

- Do not drop the device or subject it to physical shock.
- To ensure explosion-proof performance, do not damage explosion-proof surface.
- Do not place the device in extremely hot, cold (the operating temperature shall be -40°C to +60°C), or damp locations, and do not expose it to high electromagnetic radiation.
- To avoid heat accumulation, good ventilation is required for operating environment.

- To prevent accumulation of electrostatic charge, only damp cloth can be used during the cleaning.
- While in delivery, the device shall be packed in its original packing, or packing of the same texture.
- Regular part replacement: a few parts of the equipment shall be replaced regularly according to their average enduring time. The average time varies because of differences between operating environment and using history, so regular checking is recommended for all the users. Please contact with your dealer for more details.
- If the product does not work properly, please contact your dealer or the nearest service center. Never attempt to disassemble the device yourself. (We shall not assume any responsibility for problems caused by unauthorized repair or maintenance.)

Table of Contents

1 Introduction 1

1.1 Overview 1

1.2 Model Description 1

2 Appearance 3

3 Installation 5

3.1 DS-2781 and DS-2783 Series Installation..... 5

3.2 DS-2780 and DS-2782 Series Installation..... 11

1 Introduction

1.1 Overview

Explosion-proof terminal box is specially designed for camera wiring in explosive environment.

Explosion-proof terminal box adopts stainless steel enclosures, receiving an IP68 rating for ingress protection.

Application Scenarios: oil industry, chemical industry, port, grain processing industry, etc.

1.2 Model Description

This manual is applicable to the following models:

Table 1-1 Applicable Model and Feature

Product Model	Power Adapter Preinstalled	Cable Gland Use
DS-2781ZJ-X DS-2781ZJ-X/316L DS-2783ZJ-X	Yes Input: 110 to 240 VAC Output: 12 VDC	Use cable gland sealed with setting compound (buy separately)
DS-2780ZJ-X DS-2780ZJ-X/316L DS-2782ZJ-X	No Input/Output: 110 to 240 VAC	Use cable gland with elastomeric sealing rings (included in package)

Note

- Buy certified cable glands in advance for DS-2781 and DS-2783 series terminal box. For recommended models, see below.
- For DS-2780 and DS-2782 series terminal box, flexible conduit is supported with supplied M25 to G3/4 adapters.

Table 1-2 Recommended Cable Gland Sealed with Setting Compound

Brand	Model
Hawke	ICG623/B-M25 SS
CMP	N.P Brass 25 PX2KX REX M25

Explanation of model naming:

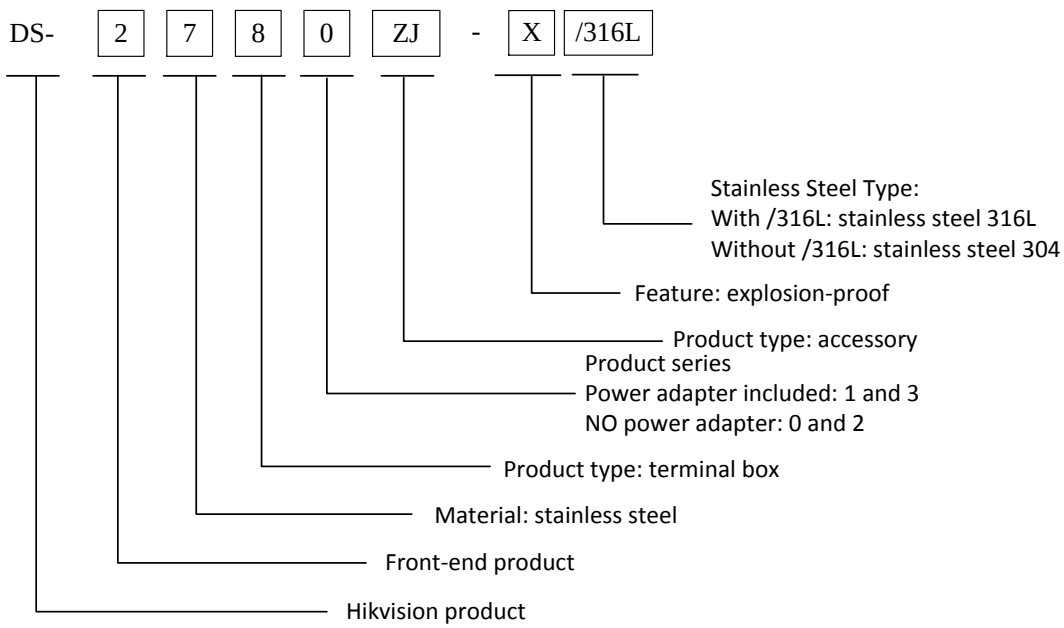

Figure 1-1 Model Explanation

2 Appearance

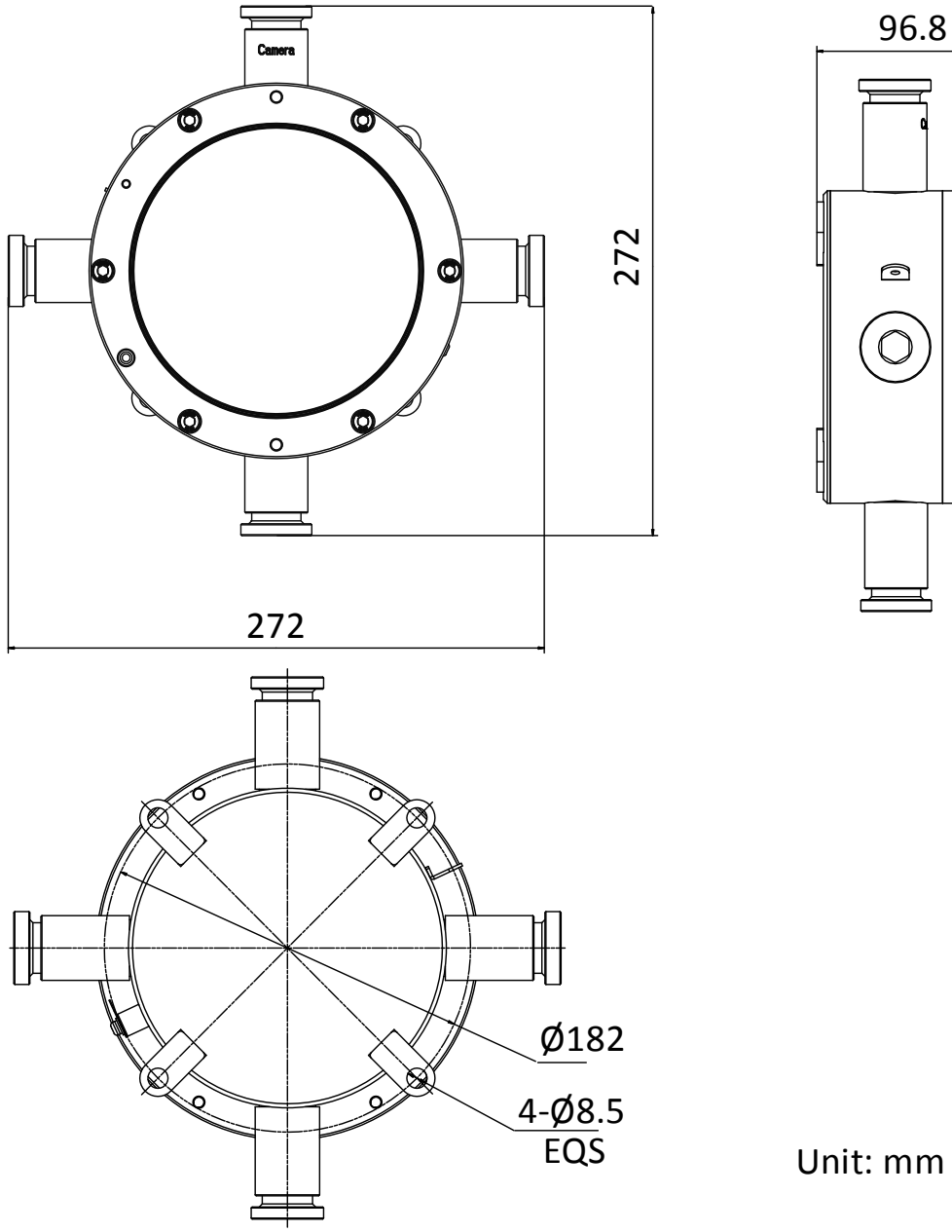

Figure 2-1 Explosion-Proof Terminal Box Overview

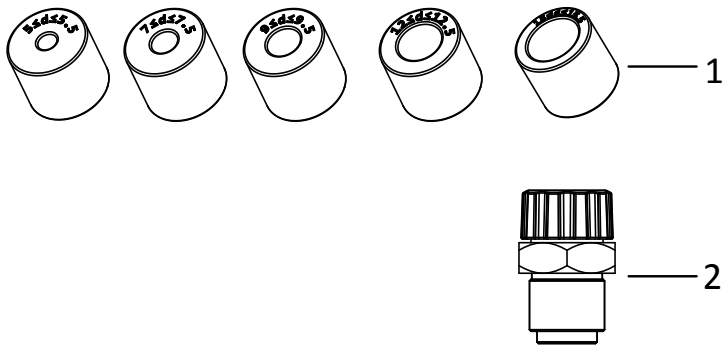

Figure 2-2 Elastomeric Sealing Rings Overview

Table 2-1 Accessory Description

No.	Description
1	Elastomeric sealing rings (DS-2780 and DS-2782 series included)
2	M25×1.5 to G3/4 adapter (DS-2780 and DS-2782 series included)

3 Installation

Before you start:

- Make sure the device in the package is in good condition and all the assembly parts are included.
- Make sure all the related equipment is power-off during the installation.
- Check the specification of the products for the installation environment.
- Standard power input for DS-2781 and DS-2783 series is 110 to 240 VAC.
- DS-2780 and DS-2782 series supports multiple power types. Make sure the power meets anyone of 110 to 240 VAC, 24 VAC, 8 to 36 VDC, PoE (802.3af), and PoE (802.3at).
- Make sure that the wall is strong enough to withstand four times the weight of the device.
- Keep the device from bumps or scratches during installation.

3.1 DS-2781 and DS-2783 Series Installation

Before you start:

Cable gland sealed with setting compound is required for the terminal box installation.

Buy two certified cable glands in advance for desired using environment. For recommended models, see *Section 1.2*.

Steps:

1. Drill four screw holes (Ø8 mm) according to the dimension of the terminal box (see Figure 2-1), and insert four M8 × 80 expansion bolts.
2. Secure the terminal box on mounting place.

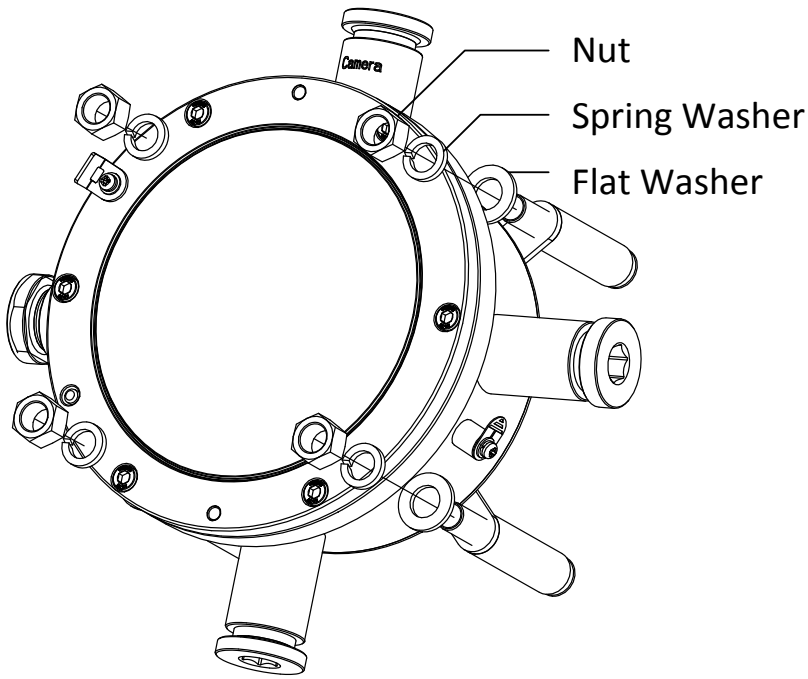

Figure 3-1 Secure Terminal box

3. Disassemble the terminal box.

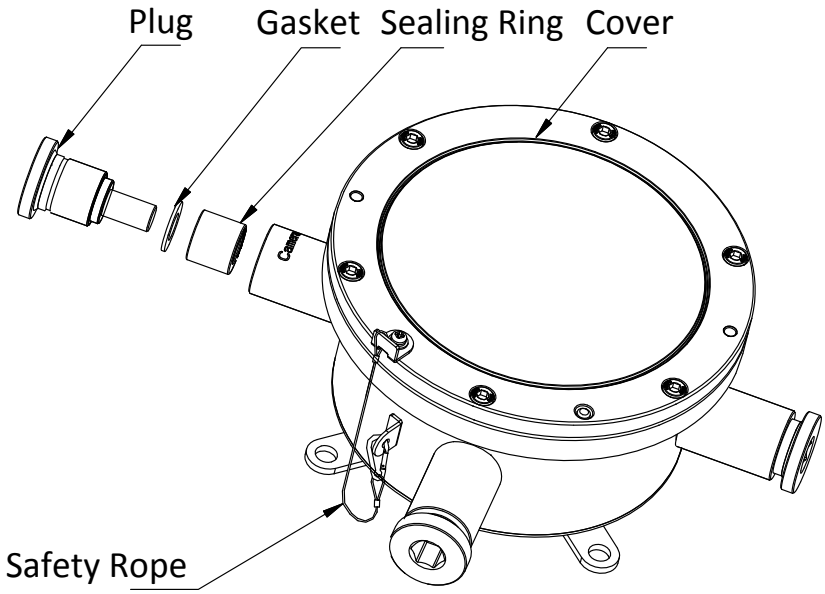

Figure 3-2 Disassemble Terminal Box (1)

1). Loosen the plugs at “Camera” end and its opposite end, and take out the gaskets and the sealing rings.

Note

Normally, two ends are enough for cable routing. The others are reserved for unexpected conditions.

Keep the unused ends firmed sealed (torque 50 Nm).

2). Unscrew and remove the cover.

Note

When removing the cover,

- Do NOT release the safety rope.
- Prevent the explosion suppression surfaces from bump or scratch.

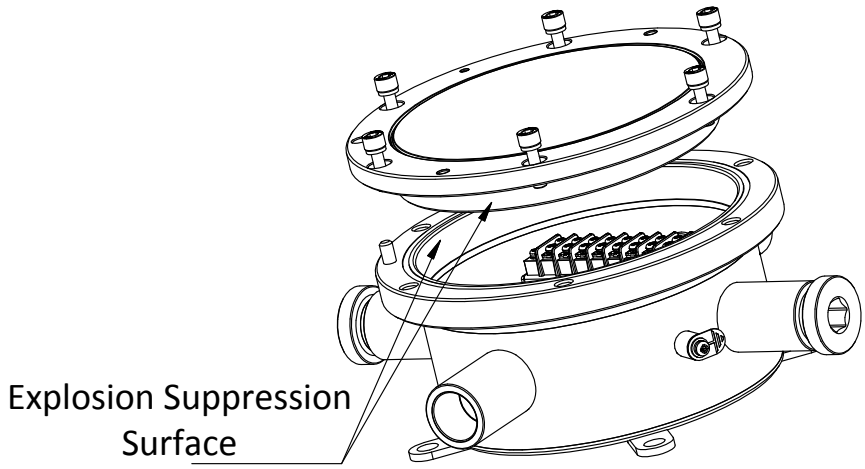

Figure 3-3 Disassemble Terminal Box (2)

4. Route cables and wiring.

   1). Install the camera cable to cable gland (sealed with setting compound). Refer to installation guide of the cable gland for detailed steps.

   2). Secure the cable gland together with the cable gland sealing ring (a component of cable gland) to the “Camera” end.

   Note

   For the torque information, refer to the installation guide of the cable gland.

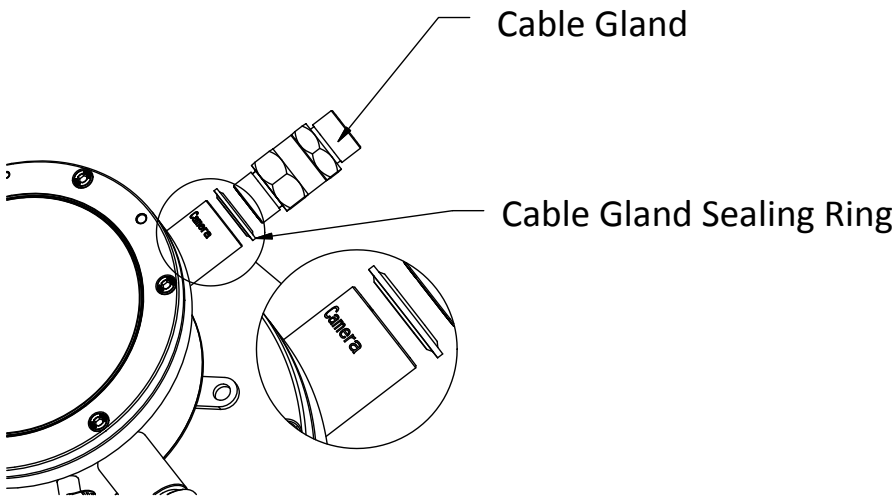

Figure 3-4 Install Camera Cable

3). Connect wires to corresponding terminals.

4). Install a RJ45 head to network cables and plug it to RJ45①.

5). Repeat above steps to route source cables through the opposite “Camera” end, connect wires, install a RJ45 head and plug it to RJ45②.

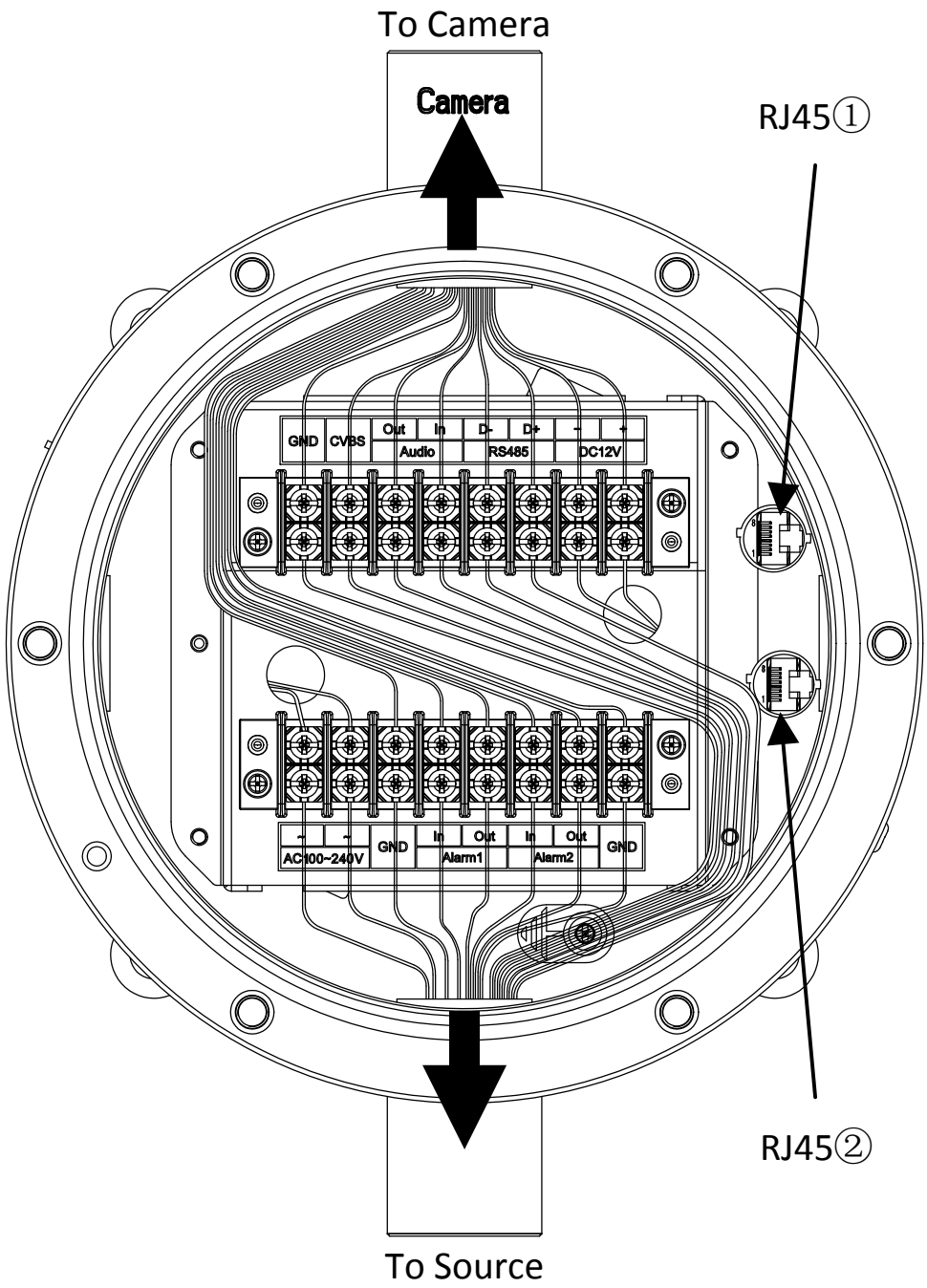

Figure 3-5 Wiring

5. Screw the cover back to terminal box.

1). Check to ensure the O-shape ring stays in terminal box.

2). Align the locating hole of the cover with the locating pin on box, and gently lower the cover back to the box.

Note

When lowering the cover, prevent the explosion suppression surfaces from bump or scratch.

3). Tighten the screws (torque 1.2 Nm).

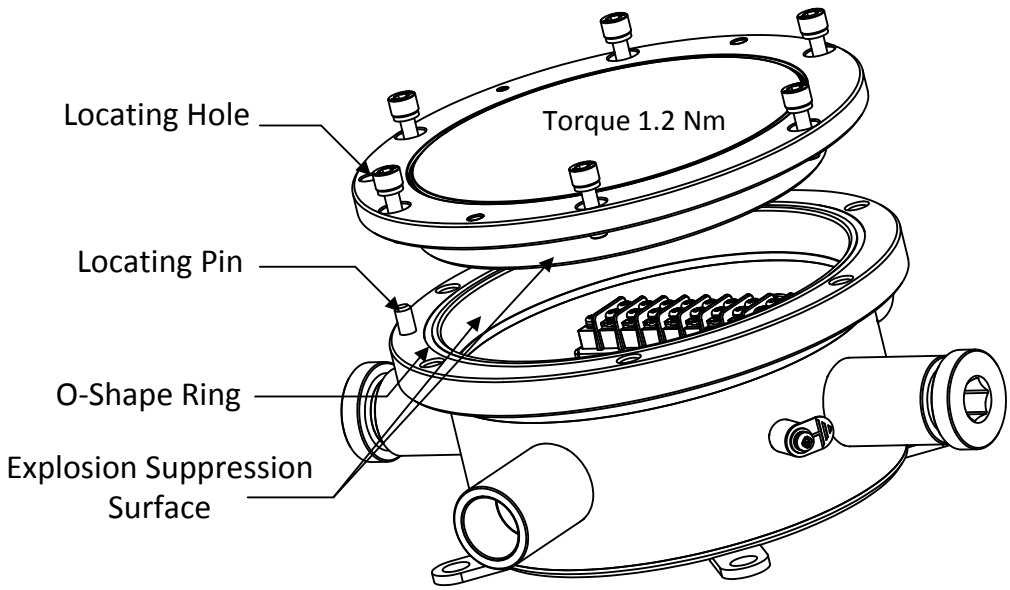

Figure 3-6 Install Cover Back

3.2 DS-2780 and DS-2782 Series Installation

Steps:

1. Drill four screw holes (Ø8 mm) according to the dimension of the terminal box (see Figure 2-1), and insert four M8 × 80 expansion bolts.
2. Secure the terminal box on mounting place.

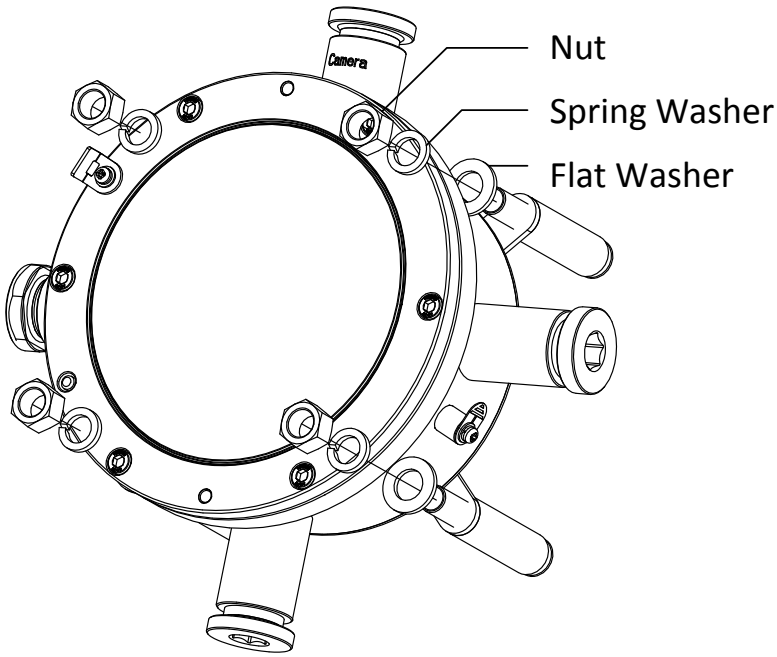

Figure 3-7 Secure Terminal box

3. Disassemble the terminal box.

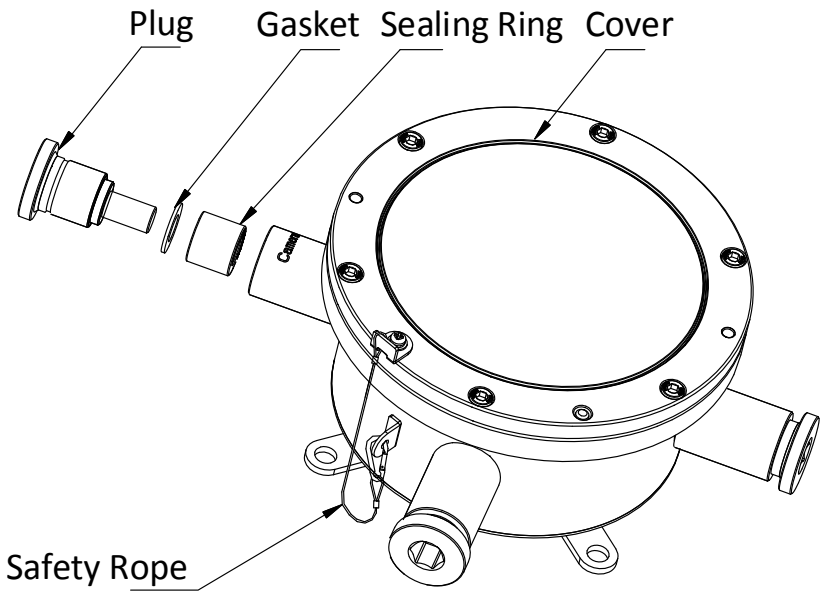

Figure 3-8 Disassemble Terminal Box (1)

1). Loosen the gland nuts at the “Camera” end and the opposite “Camera” end, and take out the gaskets and the sealing rings.

Note

Normally, two ends are enough for cable routing. The others are reserved for unexpected conditions.

Keep the unused ends firmed sealed (torque 50 Nm).

2). Unscrew and remove the cover.

Note

When removing the cover,

- Do NOT release the safety rope.
- Prevent the explosion suppression surfaces from bump or scratch.

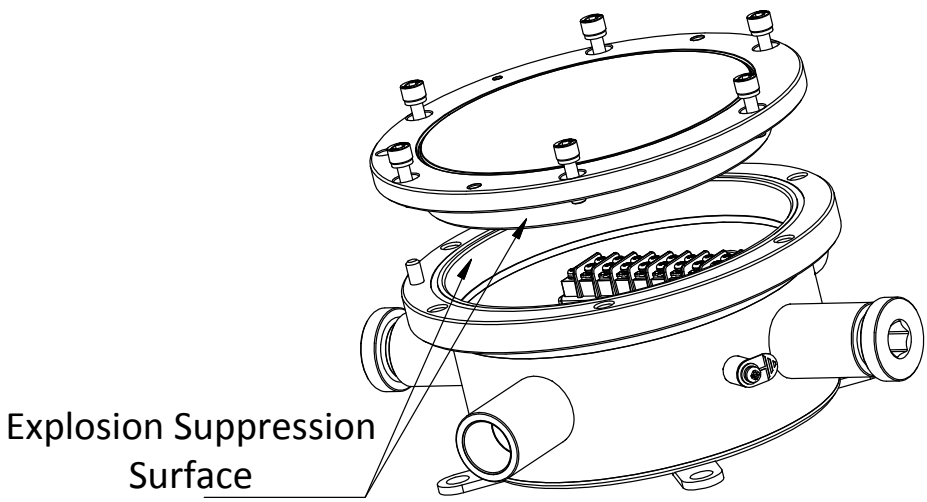

Figure 3-9 Disassemble Terminal Box (2)

4. Route cables. Cable routing with and without flexible conduit are different.

- **If camera is NOT protected by flexible conduit, follow these steps:**

1). Thread the camera cable through supplied adapter, gasket, and supplied sealing ring.

Note

Select a suitable sealing ring according to the diameter of your cable. Several kinds of sealing rings are supplied (Ø15 mm, Ø12 mm, Ø9 mm, Ø7 mm, and Ø5 mm).

2). Secure the gland nut to the “Camera” end with wrench (torque 50 Nm).

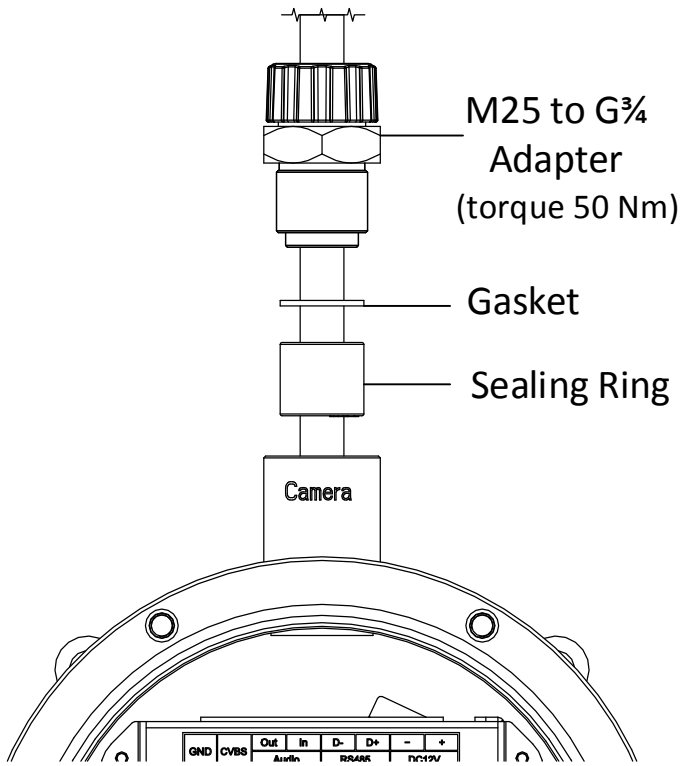

Figure 3-10 Install Camera Cable

- **If camera is protected by flexible conduit, follow these steps:**

1). Remove the thread cap on supplied adapter.

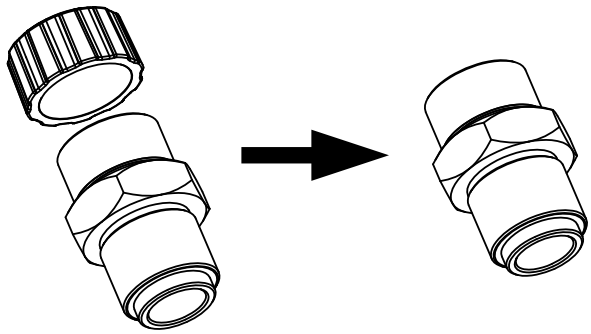

Figure 3-11 Remove Cap on Supplied Adapter

2). Thread the camera cable through sealing ring (together with flexible conduit) and the adapter, and secure the adapter to the conduit.

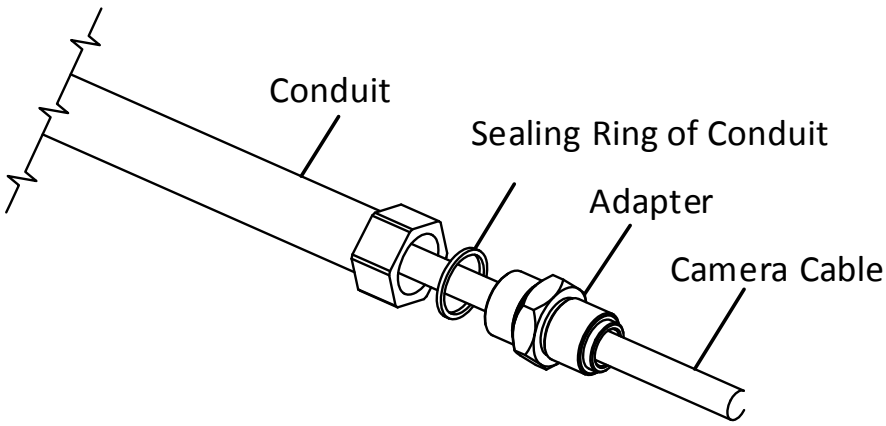

Figure 3-12 Install Adapter to Conduit

3). Thread the camera cable through the adapter, gasket, supplied sealing ring, and the box outlet.

Note

Select a suitable sealing ring according to the diameter of your cable. Several kinds of sealing rings are supplied (Ø15 mm, Ø12 mm, Ø9 mm, Ø7 mm, and Ø5 mm).

4). Secure the adapter to the “Camera” end with wrench (torque 50 Nm).

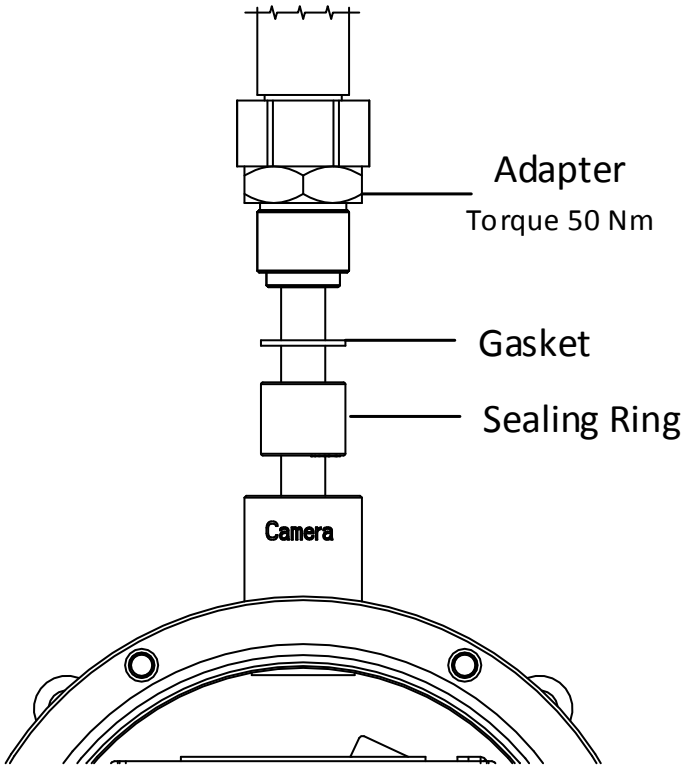

Figure 3-13 Secure the Adapter to Terminal Box

5. Connect wires to corresponding terminals.

Note

This terminal box transmits power without making any change to it.

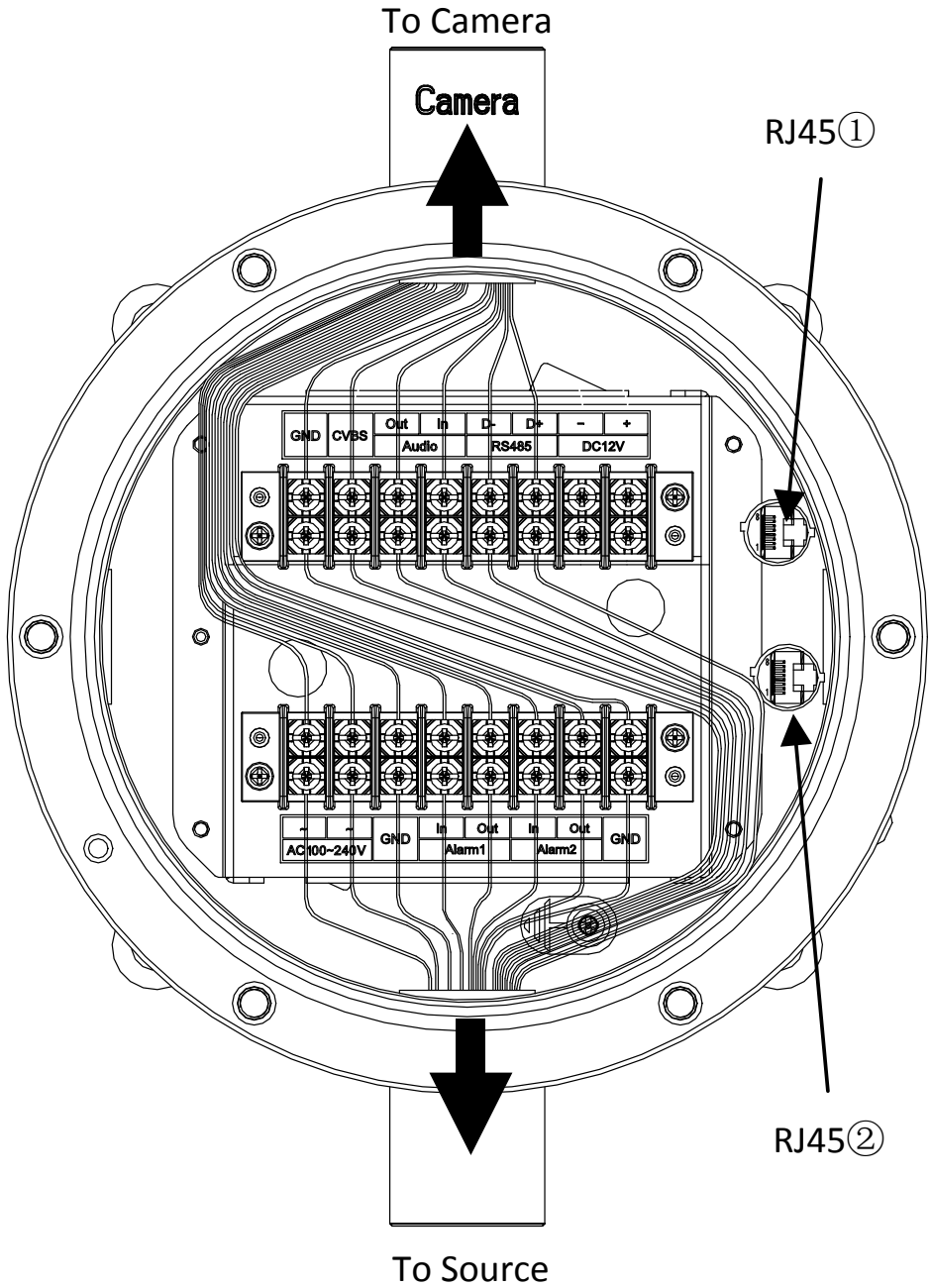

Figure 3-14 Wiring

1). Install a RJ45 head to network cables and plug it to RJ45①.

2). Repeat above steps to route source cables through the opposite “Camera” end, connect wires, install a RJ45 head and plug it to RJ45②.

6. Screw the cover back to terminal box.

1). Check to ensure the O-shape ring stays in terminal box.

2). Align the locating hole of the cover with the locating pin on box, and gently lower the cover back to the box.

Note

When lowering the cover, prevent the explosion suppression surfaces from bump or scratch.

3). Tighten the screws (torque 1.2 Nm).

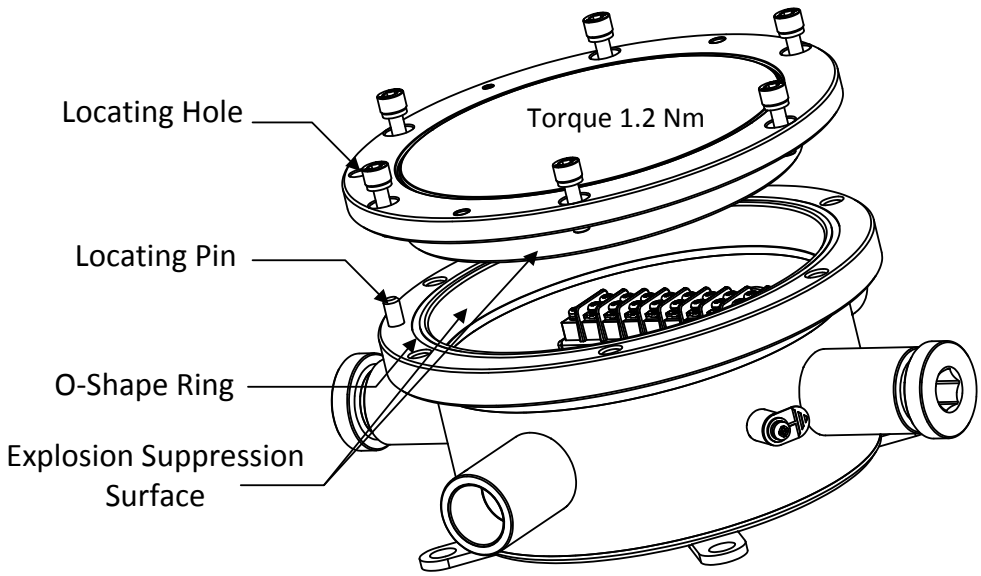

Figure 3-15 Install Cover Back



UD08260B-B